POS.	JUNIOR 640	BIG 800	BEST'960	
1	25400000			Motor
2	00150811			Screw
3	00000109			Nut
4	45400048			Plate
5	45400047			Pivot
6	00040610			Screw
7	45400054			Index
8	00000018			Washer
9	00020402			Screw
10	45400046			Pivot
11	00040606			Screw
12	35400009			Crankcase
13	00350808			Screw
14	45400070			Flange
15	45400071			Flange
16	45400072			Nut
17	00040602			Screw
18	00000019			Washer
19	35400156			Anti - return
20	00004305			Plug
21	00000214			Key
22	45400057			Block
23	35400055			Blade stretcher
24	35400010			Crankcase
25	00050807			Screw
26	35400011			Protection
27	45400058			Washer
28	45400059			Washer
29	00020406			Screw
30	00020403			Screw
31				Screw
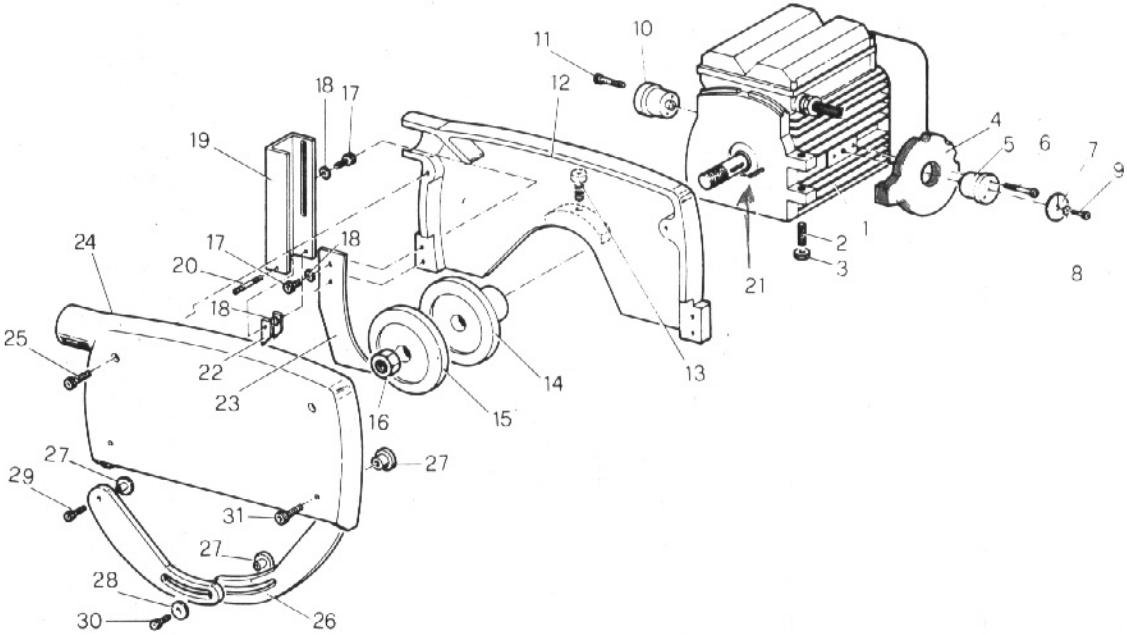
TAVOLA N° 5 - Gruppo Motore
Motor group